Sliplining of Lock-Bar Steel Water Mains, Wilmington Delaware

Andrew Jakubowitch, PE, Hatch Mott MacDonald

Who is Hatch Mott MacDonald?

- An award-winning, full-service North American engineering consulting firm
- 2,500 employees based in 70 locations, we serve both public and private clients
- Employee-owned
- Projects in more than 150 countries
- More than 11,000 professionals worldwide
- Engineering and project construction management
- Consulting – process, technology and business
- In-house engineering services for operations
- Serving mining & metals, energy and infrastructure clients for 50 years




City of Wilmington, DE
Water Distribution System

- Includes 400+ miles of water mains
  - 13 miles of water mains greater than 36 inches
- Existing system dates back to 1840's
- 37,000 customers
- Water Source: Brandywine Creek
- Large mains used for transmission of raw and treated water
  - Ductile iron pipe
  - Reinforced concrete pipe
  - Lock bar steel pipe
  - Cast iron pipe

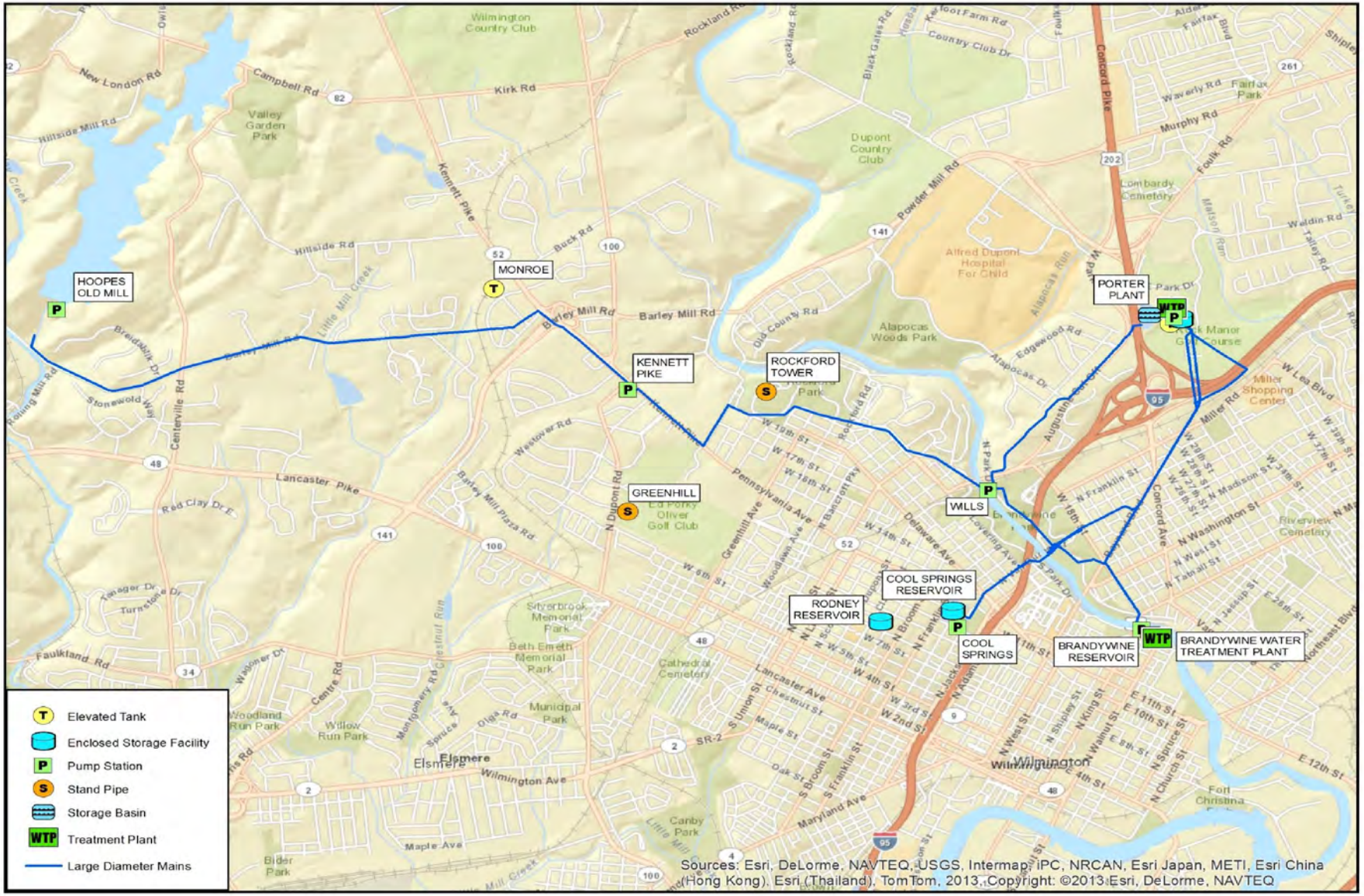
HOOPES OLD MILL
MONROE
KENNETT PIKE
ROCKFORD TOWER
GREENHILL
WILLS
PORTER PLANT
COOL SPRINGS RESERVOIR
RODNEY RESERVOIR
COOL SPRINGS
BRANDYWINE RESERVOIR
BRANDYWINE WATER TREATMENT PLANT
Elevated Tank
Enclosed Storage Facility
Pump Station
Stand Pipe
Storage Basin
Treatment Plant
Large Diameter Mains
Sources: Esri, DeLorme, NAVTEQ, USGS, Intermap, iPC, NRCAN, Esri Japan, METI, Esri China (Hong Kong), Esri (Thailand), TomTom, 2013. Copyright: ©2013 Esri, DeLorme, NAVTEQ

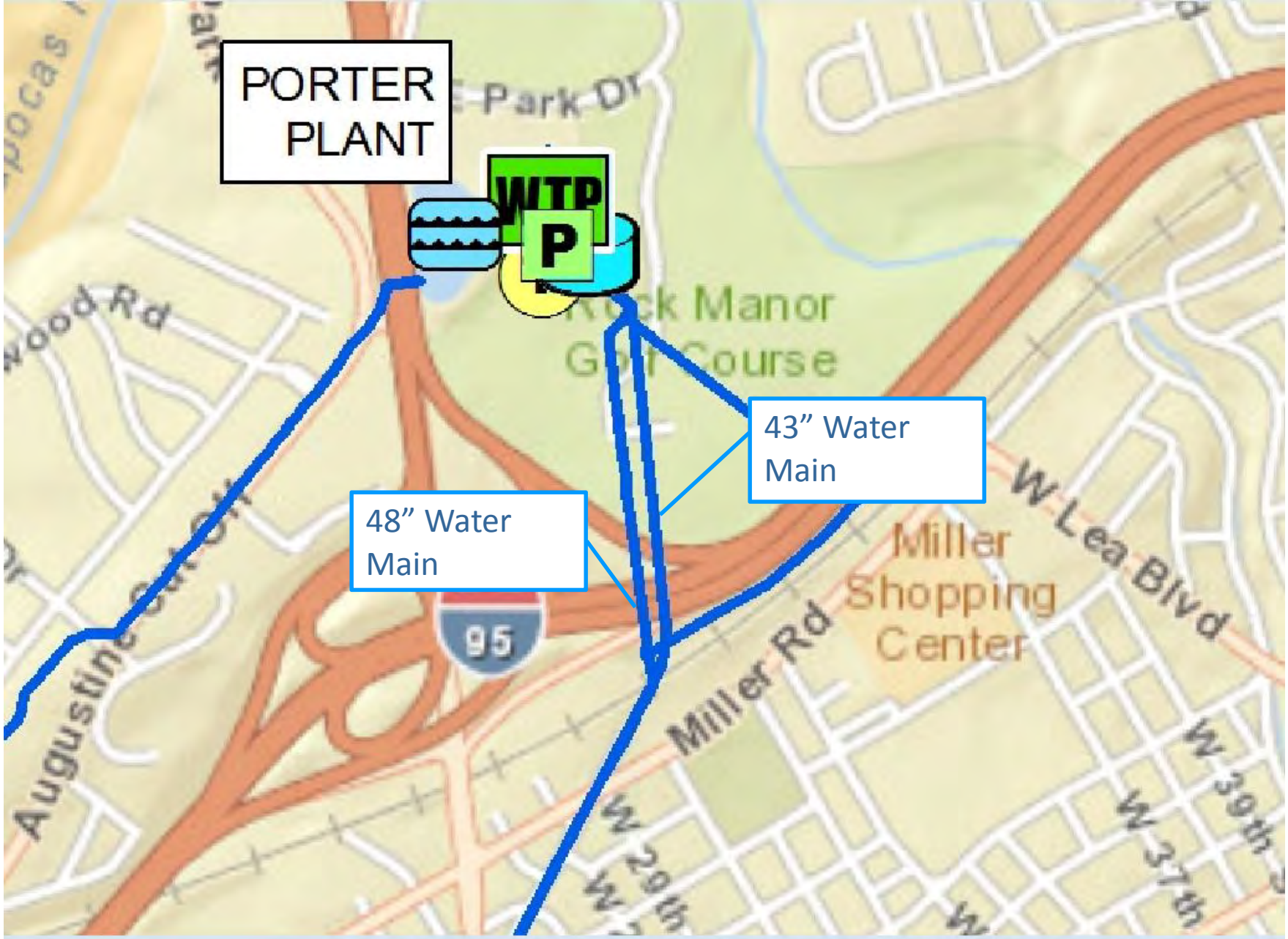
PORTER PLANT
WTP
P
Park Dr
Rock Manor Golf Course
43” Water Main
48” Water Main
95
Miller Shopping Center
Miller Rd
W Lea Blvd
Augustine Cut Off
W 29th
W 37th
W 39th

43-inch and 48-inch Lock-bar Steel Pipe

- 2 water mains located under I-95
  - 43” lock bar steel, raw water main
  - 48” lock bar steel, treated water main
  - Installed 1901 – before the I-95 existed
- Existing mains protected by steel archway during original construction of highway

Lock-bar Pipe With Arches

Existing Water Mains and Arch

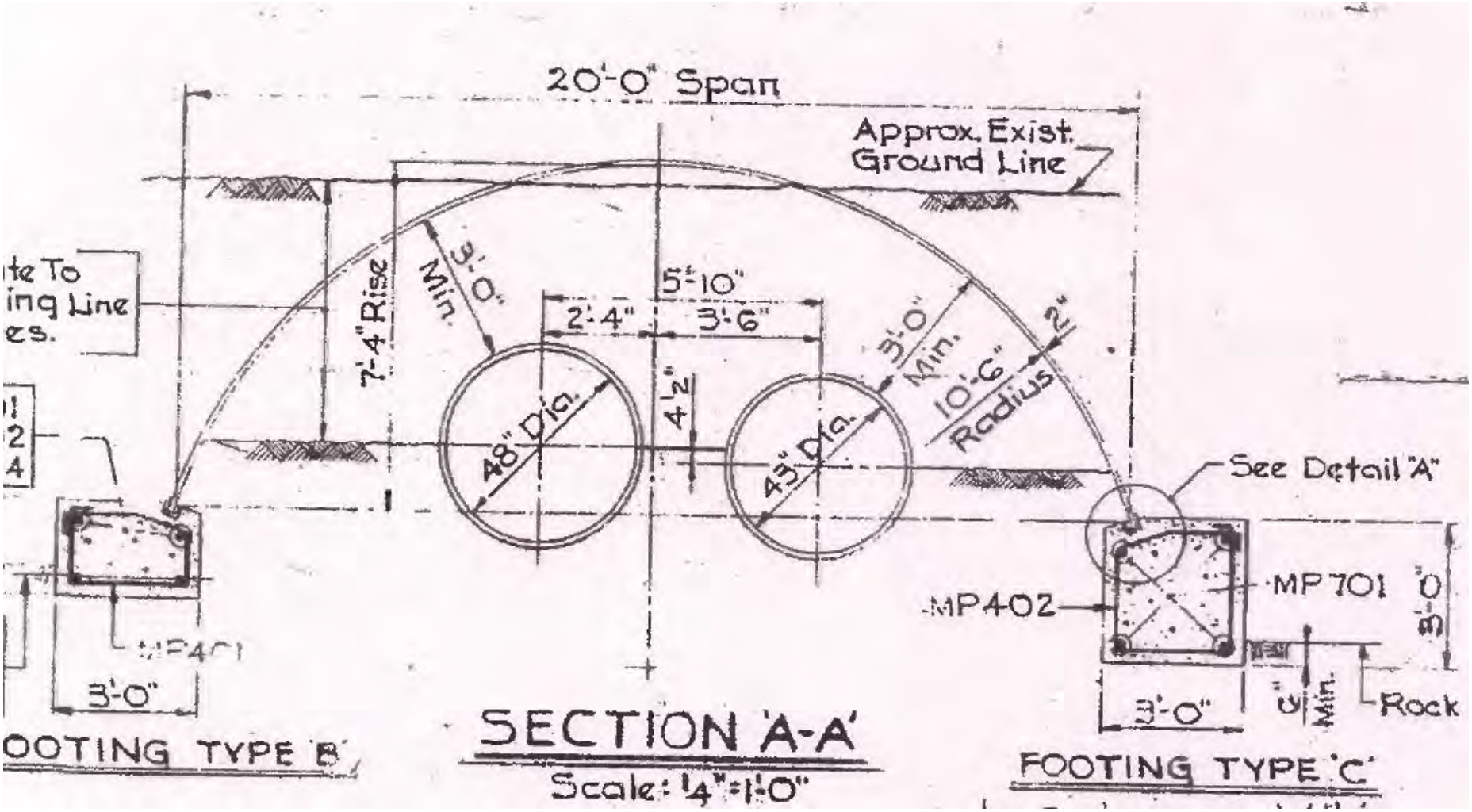

Lock-bar Steel Pipe

Lock-bar Steel Pipe is made by upsetting the edges of the plates and connecting them by a lock bar in the shape of an H going over the opposite edges and being forced down over them by hydraulic pressure. This takes the place of the riveting in the longitudinal joints. The circular joints may be made by riveting or otherwise as for riveted pipe. While double riveting develops only about 72% of the strength of the steel plate, the lock bar is capable of developing 100%. Owing to occasional defects in material or workmanship on the lock bars, in making calculations it is recommended that only 90% of the strength of the plate should be used for lock-bar pipe. Two sheets of steel each 30 ft long are joined with two bars at their edges to make a 30-foot length of pipe. The circular joints between these lengths are usually riveted in the field. Thus far lock-bar pipe has been made from plates ranging from ¼ to 7/16 inch in thickness.

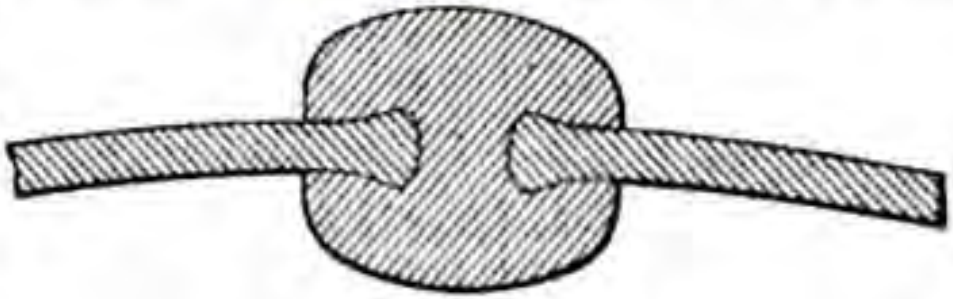

Fig. 11. Lock Bar for Steel Pipe

Lock-bar Steel Pipe

I-95 / Route 202 Interchange DelDOT Project

- Project includes adding lanes to I-95 ramps, realignment and reconstruction of certain ramps, reconstruction of US 202 bridge deck, and repaving of I-95
- New exit/entrance ramps proposed to be installed over unprotected sections of main
- Large amount of fill required for construction
  – additional load on unprotected pipe

Image courtesy of DelDOT/ McCormick Tayler

Protection of Existing Mains

- Planning between City of Wilmington, DelDOT and HMM to determine best method to protect existing water mains
  - Provide casing arch in location of new ramps/ fill
  - Replacement
  - Clean and cement mortar lining
  - Slipline

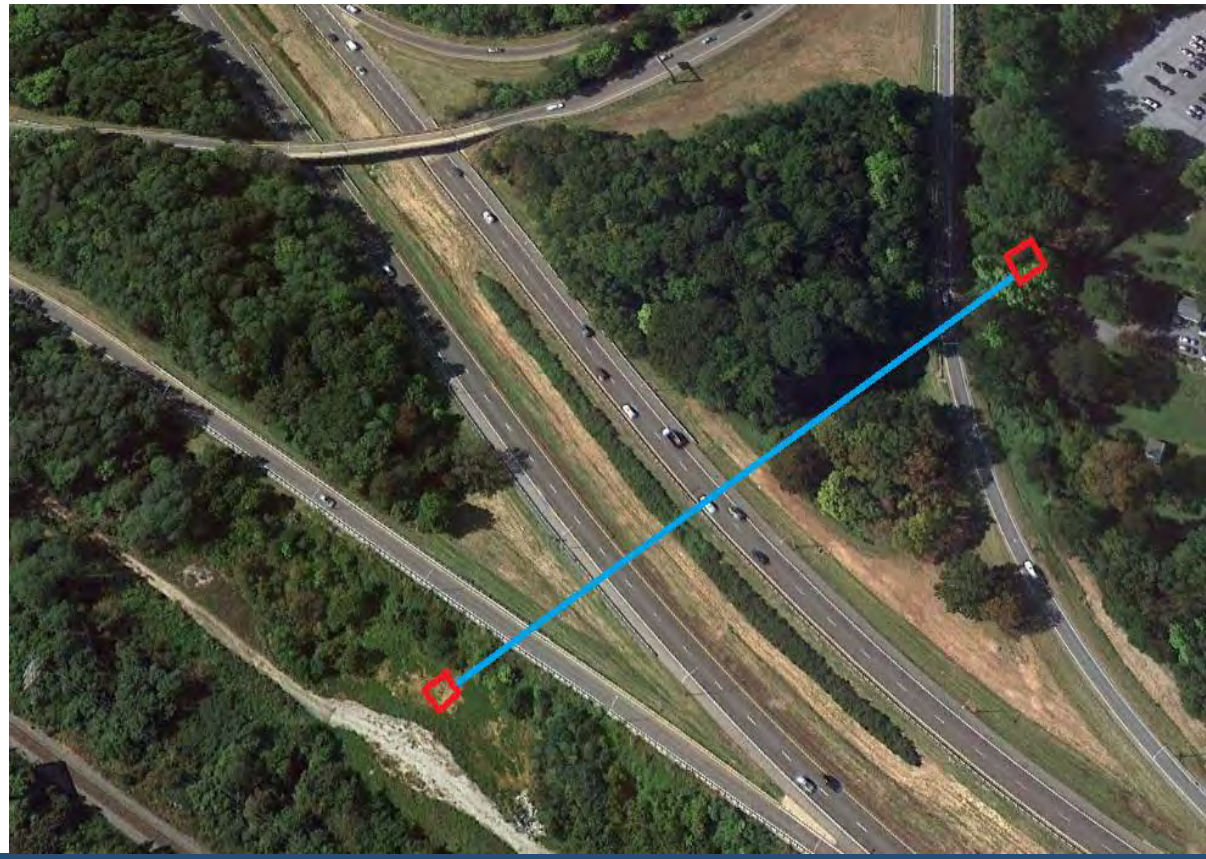

Initial Inspection of Water Mains

- The mains were visually inspected during highway construction
  - Mains exposed to determine exterior condition
  - CCTV pipe interior
  - Coupons taken from pipe sample
  - Corrosion analysis

Pipe Interior

Selection Process

- Sliplining vs. other methods
  - HDPE best track record for sliplining large pipes
  - Greater wall thickness of HDPE to help protect from sharp edges
  - Concerned about the potential stress on pipe when pulling through lockbar pipe – HDPE has best flexibility
  - Fusible PVC not available larger than 36”

Selection Process (con't)

- Sliplining vs. Other Materials (cont'd)
  - Fusing of HDPE is proven technique
  - Local contractor and less expensive than other alternatives
  - Less expensive and invasive than replacement
  - Fusible PVC not used for pipes greater than 36 inches in diameter
  - Structural spray lining not yet widely accepted for this application

Sliplining Process

- Mechanically clean interior of water mains
- Pull HDPE pipe through the existing line
- Hydrostatically pressure test and disinfect water line
- Bacteria test water mains
- Complete connection to existing mains

Sliplining Cross-Section Detail

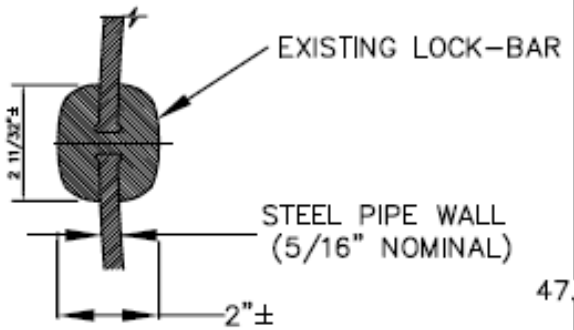

BLOW–UP B

NOT TO SCALE

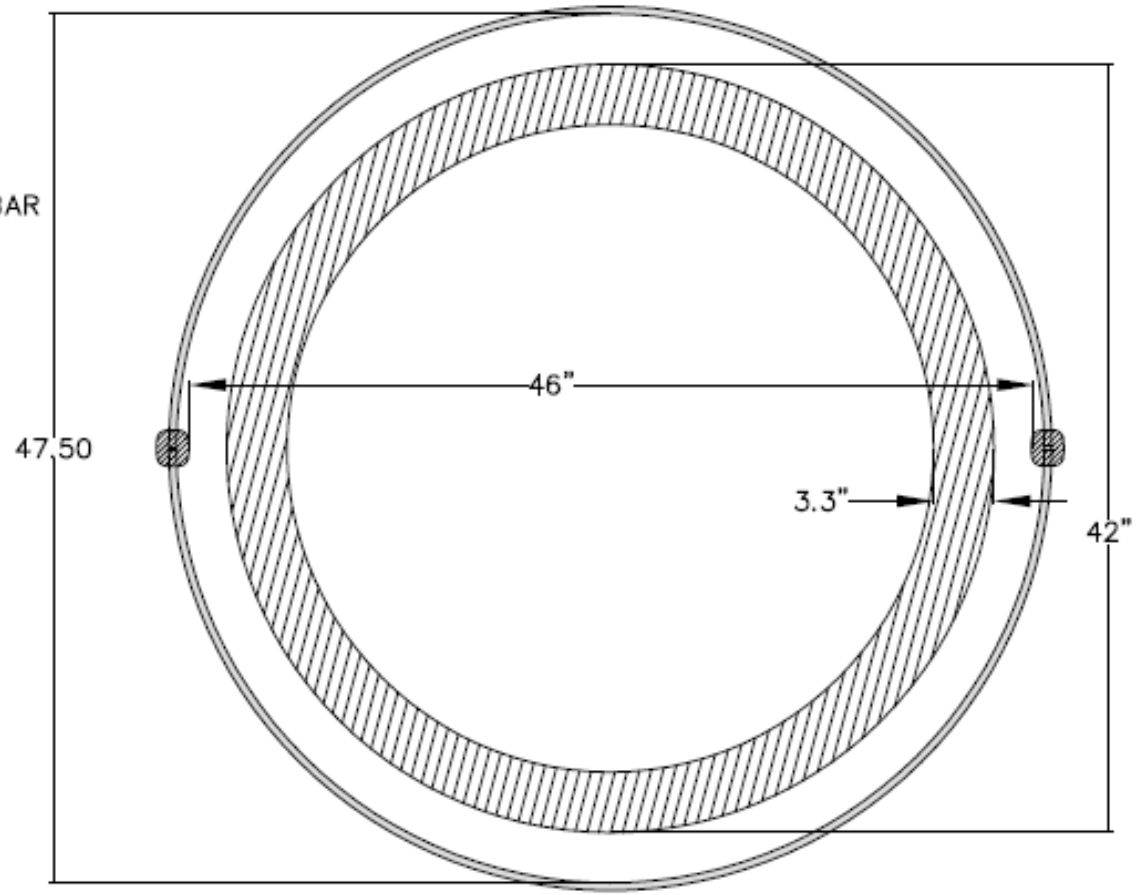

NOTE:

ALL DIMENSIONS ARE APPROXIMATE.

HDPE Cross-section

HDPE Fusing Machine

Polyethylene pipe and fittings are connected by means of butt fusion, which is done by utilizing a fusion machine that holds the pipe or fitting in a stationary position. A facer that has a cutting blade then trims the ends to be mated. A heater plate is positioned between the ends to be connected. The heater is then removed and the ends are brought together and allowed to cool.

Fusing of HDPE Pipes

Fusing of HDPE Pipe Sections

Fusing HDPE Flange Adapter

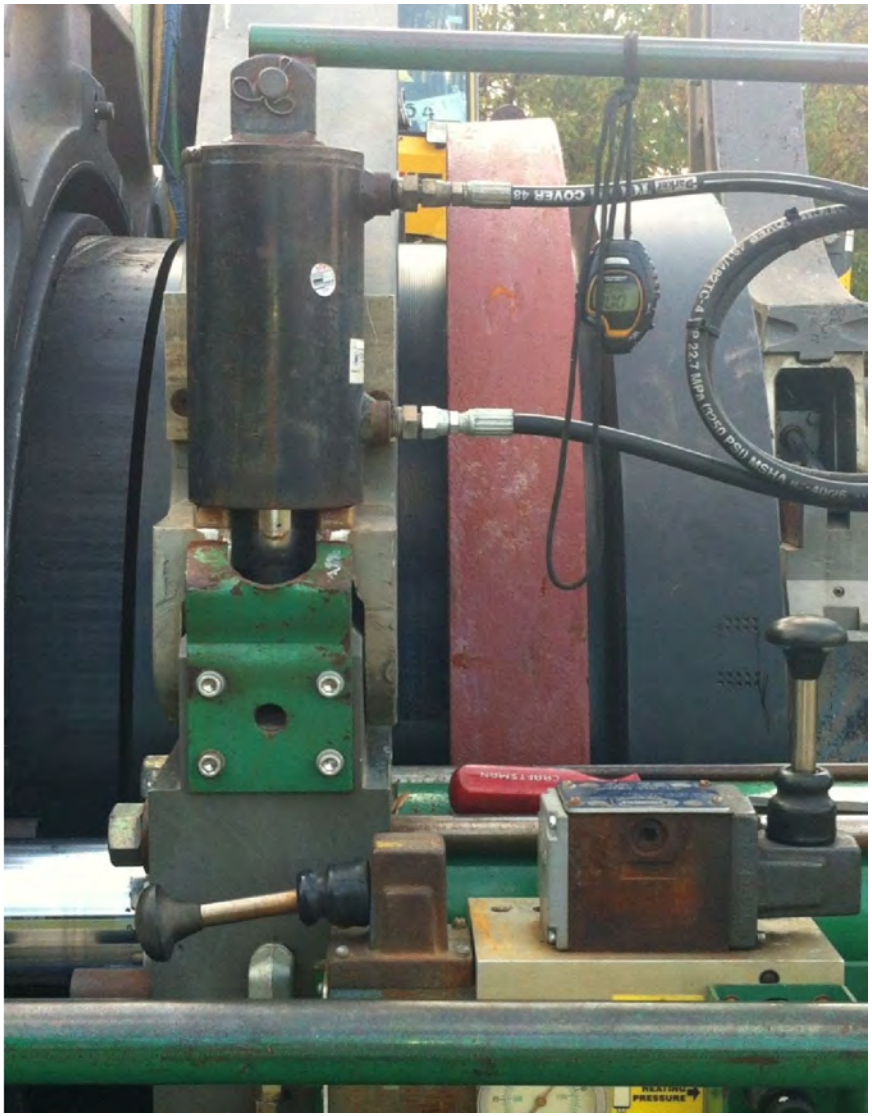

Connection to Existing Mains

Connection to Existing Mains

Connection to Existing Mains

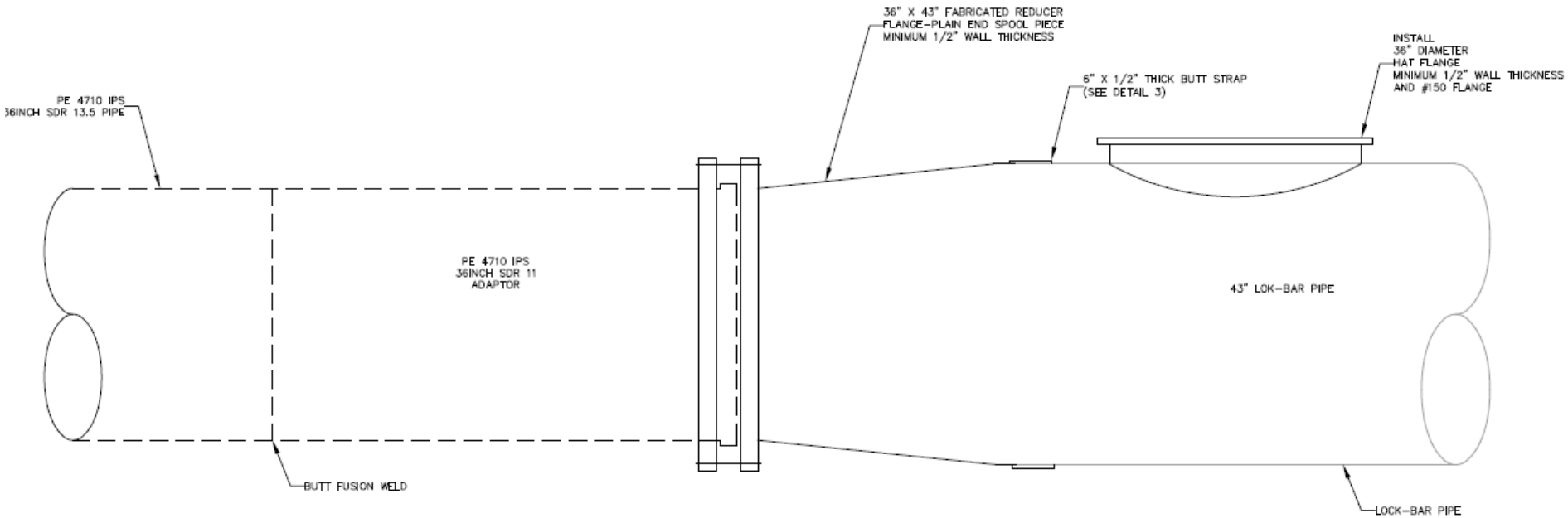

Challenges

Challenges of sliplining the mains

- Contraction/ expansion of liner pipe
- Position of existing pipe
  - Receiving pits and lay down area
    - confined area
  - Required fabrication of custom parts to connect the liner pipe to the existing pipe upstream and downstream of the project site
  - Area for pulling pipe through the carrier pipe

Results

- The two water mains were successfully sliplined without major issue
- Pressure testing and bacteria testing of the mains was successful
- The mains will be back in service in a timely manner